Advances in Science and Technology, Vol. 3, No. 2, September / October 2009, pp 113 - 119

Energy Saving Agricultural Produce Dryer

N.V. Ogueke
Mechanical Engineering Department, Federal University of Technology, P.M.B. 1526, Owerri, Nigeria
(Submitted: October 20, 2008; Accepted: July 3, 2009)

Abstract

Energy saving dryer for agricultural produce is presented. Energy saving is achieved by preheating of the inlet air with the exit air through a cross flow heat exchanger mounted such that a sufficient contact time exists between them. The dryer is of the batch type, designed for drying of grains and grated agricultural produce. Experimental results show that a reduction in moisture content from 31% wb to 15.1% wb is possible when 10kg of the produce is dried for 30 mins. Furthermore with the heat exchanger, preheating of the inlet air by about 8.8^{o}C was achieved. This corresponds to a 22% reduction in power consumption over a similar system without a heat exchanger.

Keywords: Dryer, Preheating, Heat Recovery, Granules, Active and Artificial.

1.0 Introduction

Drying involves the process of reducing the moisture content of a moist material to a level that allows for safe storage for a prolonged period without spoilage. It is one of the oldest means of food preservation. In Nigeria, the most common means of drying agricultural produce is by spreading them on mats or roof tops; the produce are subsequently dried by the sun. Since this method exposes the product to rain, dirt, dust, insects, rodents and other animals, the quality of the end product is often below a safe level for human consumption. Hence, it is not a hygienic drying method. A more hygienic means of drying using the sun energy is achieved by the use of solar dryers. Successful designs, construction and testing of this type of dryer have been reported by several authors (Ekechukwu and Norton, 1997; Forson *et al*., 2007; Sharma, Chen and Lan, 2008; Sodha *et al*., 1985). Apart from the improved hygienic condition on which the food item is preserved, it also presents more efficient and better grain drying (Ezekoye and Enebe, 2006). Its major short fall is that the performance depends largely on the availability of sun. However, this short fall is compensated by the free nature of its energy source, i.e. the sun. Because its performance is largely dependent on availability of sun, it is not suitable for large volume drying and drying during the periods when insolation level is very low. Therefore drying of agricultural products using a more suitable dryer is essential.

The artificial dryer does not depend on solar energy. It is therefore a good alternative to the solar dryers. This is especially true when the drying will be carried out in areas where the following conditions are prevalent:

- High level of rain fall
- Dry season seldom exceeding four months
- High volume of product to be dried, and
- High drying rate which cannot be met by a passive dryer.

Most artificial dryers use electric energy or fossil fuel to raise the temperature of the drying, while the heated air is forced through the drying chamber by means of a blower; hence its use in applications and seasons where solar drying is not suitable. They are sometimes called the active dryers. Different artificial dryer types exist for drying of agricultural produce (Patil and Shukla, 2006; Singh, 1994; Hebbar, Vishwanathan and Ramesh, 2004; Sitompul, Istadi and Sumardiono, 2003). The performance of these dryers is often based on the drying time of a unit mass of wet granules from initial moisture content to the desired final moisture content. Little attention is paid to the amount of energy utilized, especially when the cost of the dried product is reasonably dependent on the energy cost. Improving the lagging system, shape factor of the heating element and air flow channel and waste heat recovery are possible means of reducing the amount of energy used to dry a unit

Author's e-mail: nvogueke@futongr.com

mass of product and consequently reduce the products costs.

The exhaust air of most artificial drying machines contain reasonable amount of recoverable heat energy. This is seen from their temperature which is in the order of 50°C, depending on the type and mass flowrate of the drying air. With good selection and arrangement of heat exchanger, the exhaust air could be used to preheat the incoming air. Apart from having the tendency of improving the system's thermal efficiency, it will also significantly reduce the running cost of such a system. This work therefore presents the design, construction and test run of an artificial hot air drying machine incorporating a cross flow heat exchanger for the extraction of heat energy from the exhaust air in order to preheat the incoming air.

2.0 Materials and Methods

2.1 Dryer Design

The dryer is intended for use in drying of grated food items, grains and vegetables. The grated food items are first dewatered by pressing before feeding them into the dryer. Although the dryer is intended for use in drying basic agricultural products, the design is based on grated maize dewatered by pressing.

The following assumptions were made for the design of this equipment:

- Mass of product for drying - 10kg
- Ambient air temperature - 32°C
- Relative humidity of ambient air - 80%
- Drying air temperature - 70°C (see Sitompul, Istadi and Sumardiono, 2003)
- Maximum moisture removal rate of air - 0.014kg/s
- Drying time - 30 minutes
- Initial product moisture content - 27%wb
- Desired product final moisture content - 10%wb
- Heat exchanger area - 0.30 m^2
- Heat exchanger tube arrangement and outer diameter - staggered and 0.02m.

The mass flowrate of air is obtained from the relation between moisture removal rate, mass flowrate and humidity ratio at inlet to and exit from the dryer given as (see Umez-Eronini, 1985):

$$\dot{m}_{moisture} = \dot{m}_{air}\left(\omega_e - \omega_i\right) \quad \ldots 1$$

The volume flow rate is subsequently obtained from

$$\dot{v}_{air} = \frac{\dot{m}_{air}}{\rho_{air}} \quad \ldots 2$$

The electric motor power required to drive a fan that will deliver air at $\dot{v}_{air}$ is given by:

$$P_{motor} = \frac{P_{fan}}{\eta_{motor}} \quad \ldots 3$$

where P_{fan} is the fan power required to move the air within the dryer, from its inlet to the exit. This is obtained from equation (4) below (Douglas, Gasiorek and Swaffield, 2001).

$$P_{fan} = \rho_{air} g h_T v_{air} \quad \ldots 4$$

h_T is the total head developed between inlet to the dryer and exit from the dryer. It is estimated from

$$h_T = h_{ht} + h_{el} + h_{dc} + h_d \quad \ldots 5$$

where h_{ht} is the height of the dryer and h_{el} is the head due to the 90° elbow given as (Douglas, Gasiorek and Swaffield, 2001):

$$h_{el} = \frac{K v_{air}^2}{2g} \quad \ldots 6$$

K is the elbow coefficient with a value of 0.9 for 90° elbow. The head due to the drying chamber, h_{dc} is obtained from Darcy's equation (Douglas, Gasiorek and Swaffield, 2001):

$$h_{dc} = \frac{4 f L v_{air}^2}{2gD} \quad \ldots 7$$

The friction factor f, is the modified friction factor due to the drying bed given as (Perry and Green, 1997)

$$f = \frac{D_p \rho_{air} \phi_s^{3-n} \varepsilon^3 |\Delta p|}{2G^2 L (1-\varepsilon)^{3-n}} \quad \ldots 8$$

while the pressure drop across the drying bed, Δp is defined by (Richardson, Harker and Backhurst, 2002)

$$v_{air} = B \frac{(-\Delta p)}{\mu L} \quad \ldots 9$$

B is the permeability coefficient. From properties of bed of some regular shaped materials (Holman, 2002), a value of B = 6.2 x 10^{-10} is chosen based on the shape and size of the particles. h_d represents the head not accommodated in the earlier ones (i.e.

h_{ht} and equations 6 and 7). It includes head loss along the flow channels, across the filter, across heating elements, etc. For simplicity, this is accounted for in this work by assuming it to be 5% of the total loss due to the drying bed, elbow and height of dryer.

The capacity of the heating element required to produce the required temperature rise in the drying air is estimated from:

$$q = \dot{m}_{air} c_p \Delta T \quad ...10$$

and the area of the heating plate required for this purpose is obtained from:

$$q = h_{ap} A_p (T_s - T_\infty) \quad ...11$$

where h_{ap} is the convection coefficient between air and heated plate and it is obtained from the correlation for average laminar flow over an isothermal flat plate (Holman, 2002)

$$Nu_L = 0.664\, \mathrm{Re}_L^{0.5}\, \mathrm{Pr}^{1/3} \quad ...12$$

By choosing a type of heat exchanger and assuming value for its area, the temperature drop of exit air across the heat exchanger is obtained by noting that the exit air temperature decreases as it flows across the tube bank. As a good approximation, an arithmetic average temperature of exit air before and after the heat exchanger can be used (Holman, 2002). Thus

$$q_{ea} = h_{ea} A_{hx} \left(\frac{T_{ea1} + T_{ea2}}{2} - T_b \right) = \dot{m}_{air} c_{p,air} (T_{ea2} - T_{ea1}) \quad ...13$$

T_b is the heat exchanger tube temperature which is taken as the same as the ambient temperature before the exit air makes contact with it. The convection coefficient between the exit air and the tube, h_{ea} is obtained from the correlation given in Holman, 2002 as:

$$Nu = C\, \mathrm{Re}_{d,\max}^{n}\, \mathrm{Pr}^{0.36} \left(\mathrm{Pr}/\mathrm{Pr}_w \right)^{1/4} \quad ...14$$

For gases, the ratio $\mathrm{Pr}/\mathrm{Pr}_w$ is negligible and as such can be left out of equation (14). *C* and *n* are constants dependent on the value of $\mathrm{Re}_{d,max}$.

Results of calculation based on the above assumptions and equations are presented in Table 1. Subsequently the dryer was constructed based on results in Table 1.

Table 1: Some calculated design parameters of the dryer.

Volume (mass) flowrate	0.05 m^3/s (0.053 kg/s)
Fan motor power	0.75hp
Capacity of required heater	3kW
Area of heating plate	0.8 m^2
Number of heat exchanger tubes	37
Energy transferred to inlet air at heat exchanger	520 W

2.2 Description of Dryer

The dryer is an active batch-tray type. Its schematic diagram is shown as Figure 1. Temperature of the drying fluid, air, is raised from ambient to the required drying temperature by heating through a finned plate electric heater (see Figure 2) whose effective heating surface area is 0.8 m^2 with a total heating capacity of 3kW. The drying chamber consists of a drying bed which is a circular tray of diameter 0.58m and a depth of 0.25m made from aluminum (see Figure 3). The base of the drying bed is made of wire gauze to enable air flow from the base through the product to be dried. Air movement within the dryer is achieved by the pull of a centrifugal fan mounted on the upper side of the drying chamber and driven by a 0.75hp electric motor while air temperature is regulated with a variable thermostat with a maximum set point of 70°C so as not to destroy the grains. In order to reduce granules escape due to the centrifugal fan pull, a "catch bag" made from pure cotton material is employed, mounted above the drying bed. It has the same diameter as the drying bed. Preheating of the inlet air is achieved by allowing it exchange heat in a cross flow heat exchanger with the exhaust air. The heat exchanger is mounted on exit portion of the centrifugal fan, presenting a total heat transfer area of 0.30 m^2. It consists of 37 galvanized zinc tubes, each with an outer diameter of 0.02m with a thickness of 0.0005m and height of 0.13m. The tubes are arranged in scattered order and in such a manner as to allow reasonable contact time with the exit air. The entire assembly is properly insulated with foam and then mounted on steel support made

from mild steel "U" channels.

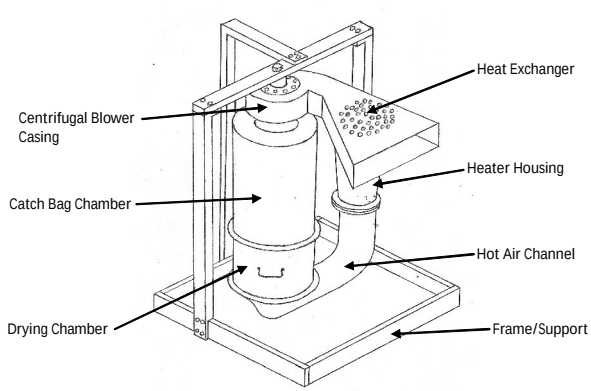

Figure 1: Isometric (Pictorial) drawing of the dryer showing some of its components.

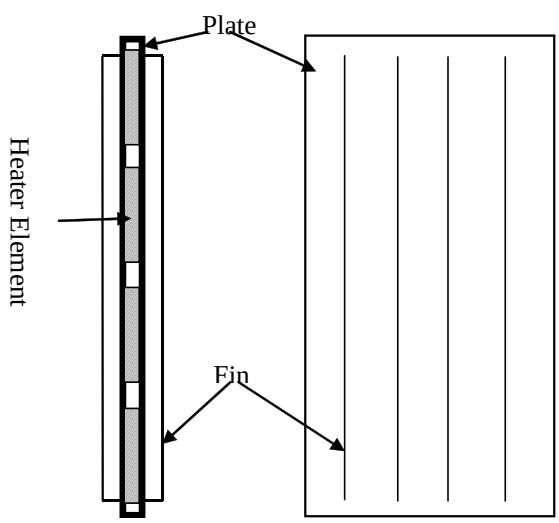

Figure 2: Diagram of the heating plate.

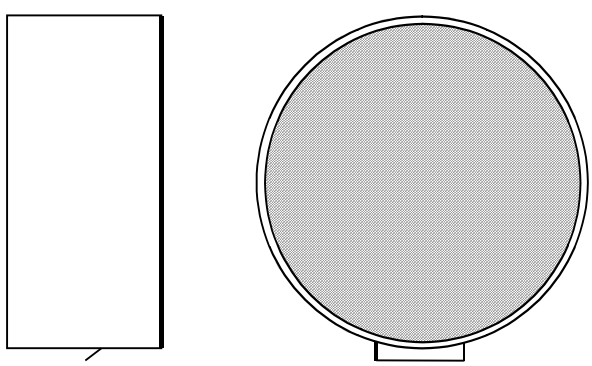

Figure 3: Diagram of the drying chamber

3.0 Results and Discussion

Samples of food items, grated and non-grated, were collected. The grated ones were dewatered by mechanical pressing in a clean cotton sack. Small samples were subsequently weighed and put in an oven in order to completely remove moisture. Their new weights were noted and used thereafter in the determination of the moisture content. Similar procedure was carried out for the non-grated food items in order to determine their moisture contents. A fixed mass of each moist food item was fed into the drying chamber of the dryer. The dryer was allowed to run for 30 minutes after which the food item was removed and its new weight and hence moisture content determined. Temperatures immediately before and after the heat exchanger for the exhaust and inlet air as well as temperatures of air before and after the drying bed were measured at 5 minutes interval from where their average values were subsequently obtained. The process was repeated three times for each food item considered. Other parameters measured were the ambient air temperature and relative humidity. Results obtained are presented in Figures 4 – 8.

The results in general show that the moisture content dropped from between 29 – 31% wb to about 15% wb. This corresponds to a moisture content drop in the range of 12.3 – 15.9%. The dryer was designed to produce a moisture content drop of 17%, i.e. from 27% to 10% wb. The above results show that about 72 – 93.5% of the design value was attained. The inability of the system to achieve this design value may be attributed to some constructional lapses such as poor insulation, joints and couplings, resulting in leakages and unavailability of some of the specified components. For instance, a fan of the specified power and flowrate was not available. Consequently, a smaller one was used. The other reason for this is the assumptions that enabled the use of some of the equations during the design as well as the assumption made while calculating the head loss. Figure 4 reveals that the most deviation from the expected result was for the maize grain. The major reason for such a deviation is the texture of maize grain when compared to the grated one. Overall, the moisture removal rate is between 0.0008 – 0.001 kg/s as seen from Figure 5.

Figure 6 shows that the air temperature just before the drying chamber is less than the 70°C designed for by about 1°C. The reasons given earlier for not achieving the 17% moisture content loss designed

for is also responsible for this. The temperature drop across the drying chamber is between 5 – 9°C. Figures 7 and 8 reveal that the temperature drop across the heat exchanger for the inlet and exhaust air from the heat exchanger is about 8.4 and 9.7°C, respectively. The higher temperature drop observed for the exhaust air is expected as it also heats the heat exchanger tubes.

The aim of this work is not just to dry products but also to achieve this with a reduced external energy input. With an 8.4°C rise in temperature for the inlet air at the heat exchanger, if the ambient temperature is 32°C, then the amount of heat energy supplied at the heater to achieve the desired temperature of 70°C will be reduced by about 447.4 W (0.45 kW). This value is about 22% of the total energy required when there is no heat exchanger. Hence the heat exchanger achieved a reduction in the total energy by about 22%. Initially, a saving of 0.45 kW may appear small. However over a long period of dryer operation it will become significant. For instance, an hour of operation without a heat exchanger is 2.024 kWhr. When operated for 10hrs a day, in a 30 day month it will come to 607.2 kWhr. In Nigeria, the electrical energy rate is 4.00NGN per KWhr; this translates to 2428.80NGN (150.00NGN = 1.00USD). When a heat exchanger is used however, the amount reduces to 1891.92NGN representing a 22% reduction. With better construction using the right materials, a better reduction in energy consumption is possible.

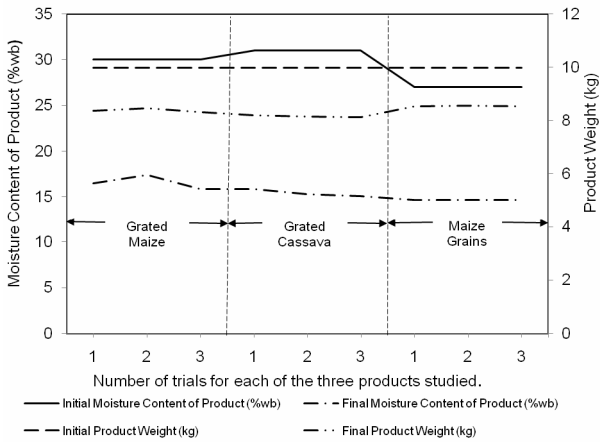

Figure 4: Initial and final moisture content and weights of products dried.

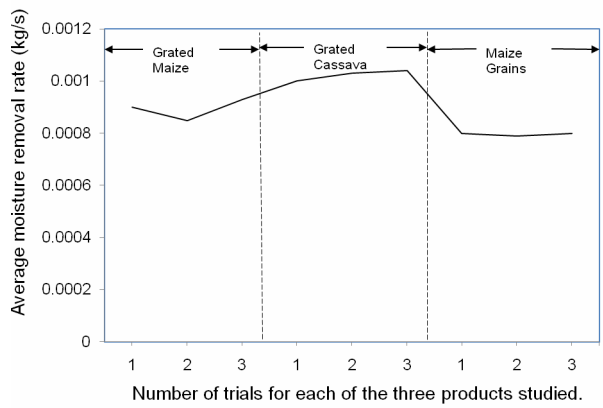

Figure 5: The average product moisture removal rate.

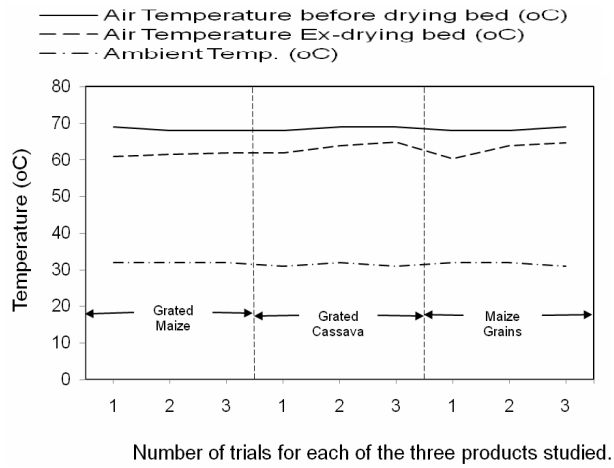

Figure 6: Air temperature immediately before and after the drying bed.

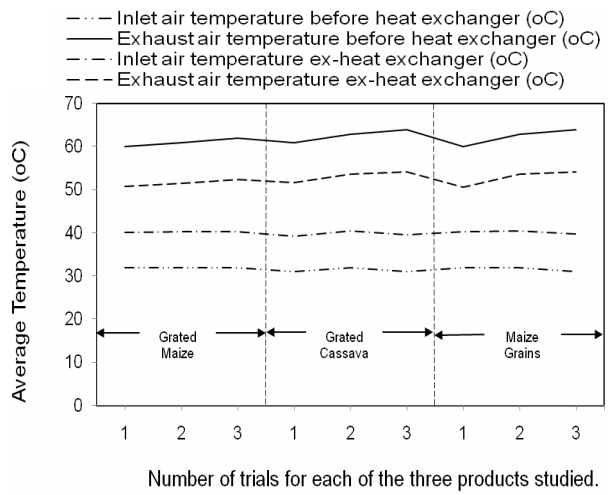

Figure 7: Average air temperature before going into and after passing through the heat exchanger.

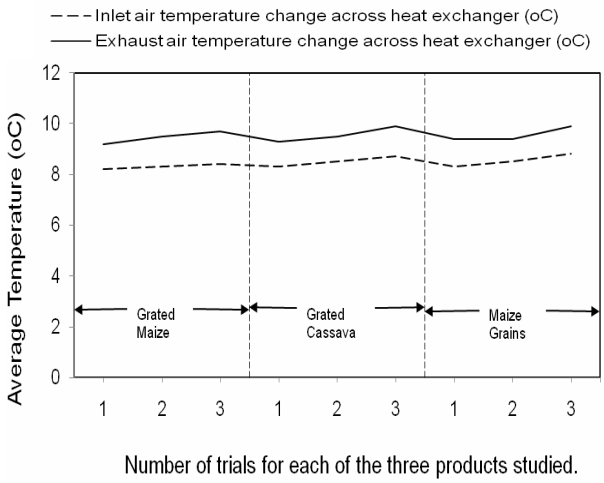

Figure 8: Average air temperature change across heat exchanger.

4.0 Conclusion

The design of an energy saving dryer for preservation of agricultural produce has been carried out. The energy saving was achieved by the incorporation of a heat exchanger between the fresh air inlet and the exit air from the drying chamber in such a manner that the exit air from the drying chamber preheats the incoming air. Results of the experimental tests reveal that an energy saving of up to 22% is possible. This performance could be surpassed with better construction using the right materials.

Acknowledgement

My sincere appreciation goes to Mr. Ukonu, Chidozie U., Mr. Kama, Anthony A. and Mr. Ofoha, Godman C. for their assistance in data collection.

Nomenclature

A_p	=	Heating plate area (m^2)
A_{hx}	=	Heat exchanger area (m^2)
D	=	Drying bed diameter (m)
D_p	=	Average particle diameter as defined in Perry and Green 1997 (m)
g	=	Acceleration due to gravity (m/s^2)
G	=	Fluid superficial mass velocity based on the empty chamber cross section (kg/m^2s)
L	=	Length of drying bed (m)
$\dot{m}_{air}$	=	Air mass flowrate (kg/s)
$\dot{m}_{moisture}$	=	Moisture removal rate (kg/s)
Pr	=	Prandtl number
Pr_w	=	Prandtl number based on T_b
P_{motor}	=	Electric motor power (W)
q	=	Heat capacity (W)
q_{ea}	=	Heat lost by exit air across the heat exchanger (W)
Re_L	=	Reynolds number based on plate length
$Re_{d,max}$	=	Reynolds number based on tube diameter and maximum flow velocity over the tubes.
T_{ea1}	=	Exit air temperature before heat exchanger (K)
T_{ea2}	=	Exit air temperature after heat exchanger (K)
v_{air}	=	Air velocity (m/s)
$\dot{v}_{air}$	=	Air volume flowrate (m^3/s)
ρ_{air}	=	Air density (kg/m3)
μ	=	Fluid viscosity (kg/ms)
ϕ_s	=	Shape factor (as defined in Perry and Green 1997)
ε	=	Void fraction
η_{motor}	=	Electric motor efficiency

Superscript

n	=	Exponent defined in Perry and Green 1997

References

Douglas, J.F., Gasiorek, J.M. and Swaffield, J.A. Fluid Mechanics. 4th edition, Pearson Education Pte. Ltd., Delhi, India, 2001.

Ekechukwu, O.V. and Norton, B. 1997, "Experimental studies of integral-type natural-circulation solar-energy tropical crop dryers", Energy Conversion and Management, **38**(14), 1483 – 1500.

Ezekoye, B.A. and Enebe, O.M. 2006, "Development and Performance Evaluation of Modified Integrated Passive Solar Grain Dryer", The Pacific Journal of Science and Technology, **7**(2), 185 – 190.

Forson, F.K., Nazha, M.A.A., Akuffo, F.O. and Rajakaruna, H. 2007, "Design of mixed-mode natural convection solar crop dryers: Application of principles and rules of thumb", Renewable Energy **32,** 2306 – 2319.

Hebbar, H.U.; Vishwanathan, K.H. and Ramesh, M.N. 2004, "Development of combined infrared and hot air dryer for vegetables", Journal of Food Engineering, **65,** 557 – 563.

Holman, J.P. 2002, Heat Transfer. 8th edition, Tata McGraw-Hill, New Delhi.

Patil, R.T. and Shukla, B.D. 2006, "A novel design of crop dryer for use in developing countries", Drying Technology, **24,** 663 – 669.

Perry, R.H. and Green, D.W. 1997, in Perry's Chemical Engineers' Handbook. 7th edition, McGraw-Hill, New York, 1997.

Richardson, J.F., Harker, J.H. and Backhurst, J.R. 2002, Coulson and Richardson's Chemical Engineering. 5th edition, Elsevier India Pvt. Ltd., New Delhi.

Sharma, A., Chen, C.R. and Lan, N.V. 2008, "Solar energy drying systems: A review", Renewable and Sustainable Energy Reviews. doi:10.1016/j.rser.2008.08.015.

Singh, K.K. 1994, "Development of a small capacity dryer for vegetables", Journal of Food Engineering, **21**, 19 – 30.

Sitompul, J.P., Istadi S. and Sumardiono, S. 2003, "Modelling and simulation of momentum, heat and mass transfer in a deep-bed grain dryer", Drying Technology, **21** (2), 217 – 229.

Sodha, M.S., Dang, A., Bansal, P.K. and Sharma, S.B. 1985, "An analytical and experimental study of open sun drying and a cabinet type drier", Energy Conversion and Management **25**(3), 263 – 271.

Umez-Eronini, E.I. 1985, "Automatic control and simulation of a small scale low cost solar dryer", in Proceedings of the Annual Conference of the Nigerian Society of Engineers, Ilorin 1985.